Installation Manual

Purity 2 Hole Wall Mounted Basin Mixer With Flanges

AVA-PU-1002-XXX

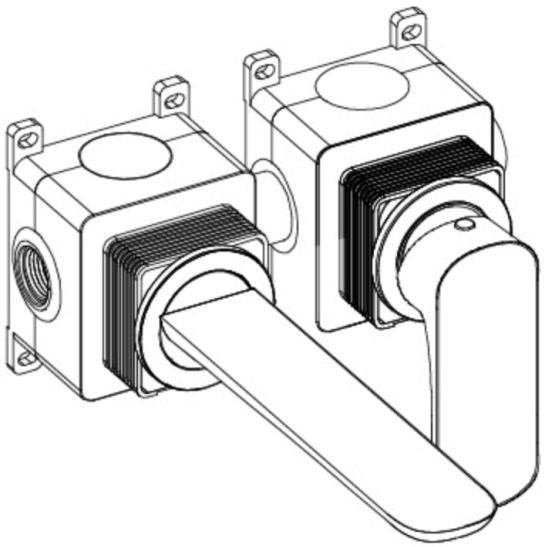

Parts List | Concealed First Fix

1	AVA-MD-2222	AVA Modular 2 Wide Installation Panel - Internal Part
1	AVA-MD-2700	AVA Modular Connection Piece - Internal Part
1	AVA-MD-2500	AVA Modular Blanking Cap - Internal Part
1	AVA-MD-2300	AVA Modular Outlet Box - Internal Part
1	AVA-MD-2800-XXX	AVA Modular Temperature & Flow Cartridge Box - Internal Part

Parts List | Finishing Set Second Fix

1	AVA-PU-1105	AVA Trend Wall Mounted Basin Spout Flow Restrictor Aerator
1	AVA-PU-1004-XXX	AVA Trend 184mm Wall Mounted Spout Only
2	AVA-RS-9010-XXX	AVA Round 60mm Flange
1	AVA-PU-2050-XXX	AVA Trend Temperature & Flow Handle

* Please note. Where "-XXX" is displayed, this denotes the colour code of the product

IMPORTANT: This product should only be fitted by a qualified professional. Improper installation could result in damage to the product and the property as well as invalidation of the product guarantee. As you are fitting a modular product, please ensure to cut the tiles with circular holes no bigger than 50mm. We advise using the smoked plastic covers as a template guide. Please also make sure your finished wall sits within the min & max guides on the black box as there are no extension kits available.

Grade 304 Stainless Steel · Tricolore Mix & Match Options · Vernet European Cartridges · 15 Year Product Guarantee · Neoperl Aerator Technology · Sustainable Manufacturing · 4 Quality Finishes · Kerox European Cartridges · Design & Assembled in the UK · Superior PVD Production

Step 1) Connect all blackbox parts using the connection kits (AVA-MD-2700). Ensure they are securely fastened using an allen key and then sealed together using the retaining nut. The valves should not be detachable and all black O rings should not be visible, ensuring water tight fittings.

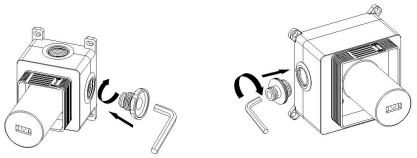

Step 2) Fit the backing plate (AVA-MD-2222) using the provided screws. Ensure each blackbox is securely tightened to the backing plate and to each other

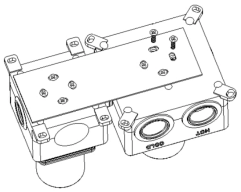

Step 3) Plumb in the valve set, making sure to follow the feed labels on the black box(es) so that the correct hot & cold feeds are plumbed in and the feeds out are correct. Carry out pressure testing for any leaks before tiling. If not followed, this will result in the valve not functioning correctly. We strongly recommend fitting isolation valves on the hot and cold input feeds.

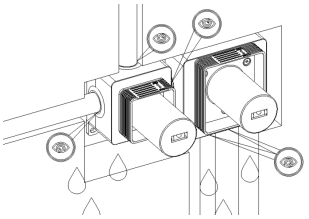

Step 4) Tile around the valve and create a template for the holes (45mm-55mm diameter). Please ensure you remove the plastic covers beforehand. The valve body has a 19mm tolerance to ensure your finished wall is within the product min & max guides.

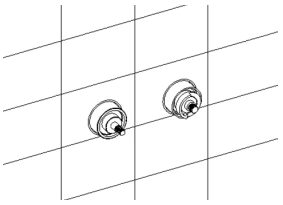

Step 5) Fit flow sleeve where applicable (AVA-RS-9030) and then slide the flanges (AVA-RS-9010) over the top of these until they are level with the tiles.

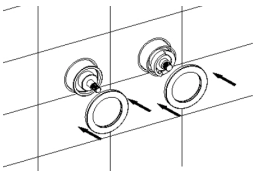

Step 7) Calibrate the thermostatic cartridge by rotating the spindle until the water flowing out of the showerhead is at 38 degrees. Remove the black stopping mechanism and position the section circled in red to get the default setting and override button to sit at the 12 o'clock position.

Step 8) Place the scratch protection plastic ring between the handle and sleeves, then tighten the handles onto the spindles using the allen key provided. The allen key is beneath the spindle. Carry out final testing.

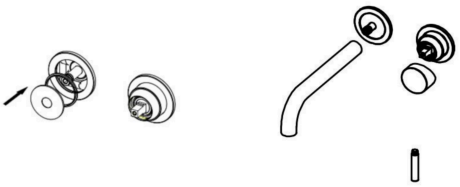

Specification

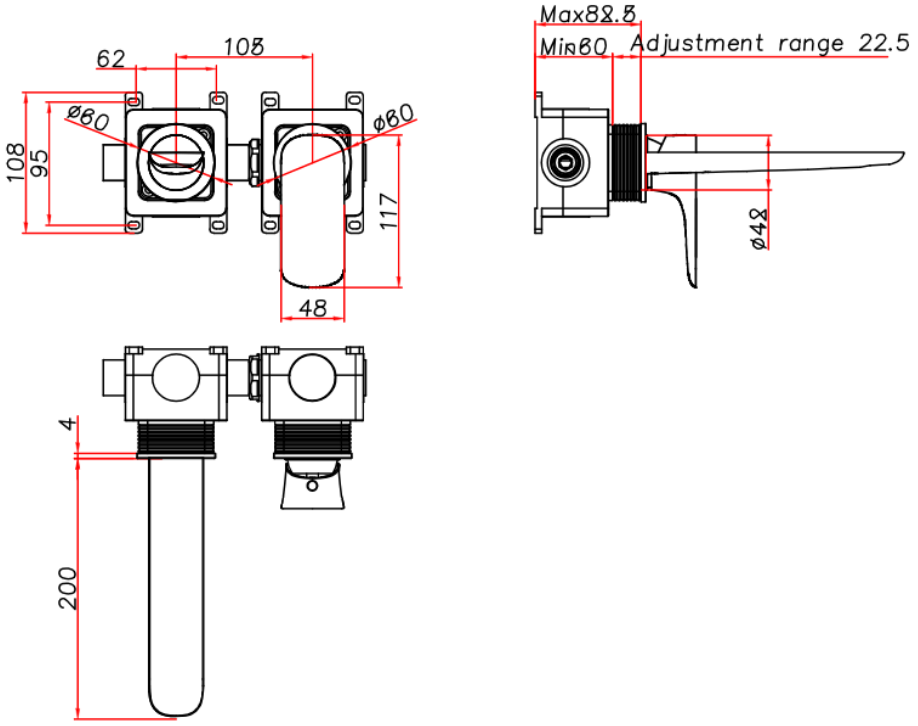

Minimum Operating Pressure:	1 Bar
Maximum Operating Pressure:	5 Bar
Flow Rate at 1 Bar:	4.2 L/min
Flow Rate at 3 Bars):	5.8 L/min
Inlet Diameter:	¾"
Outlet Diameter:	NA
Mounting Installation Depth Min & Max:	60mm - 82.5mm
Reversible:	No
Orientation:	Horizontal / Vertical
Number of Outlets/Functions:	1
Maximum Hot WaterTemperature:	65°C
Maximum Cold Water Temperature:	25°C

Cleaning & Maintenance

- All AVA products are finished to a very high standard, however, regular care is required to maintain the look, finish and performance of the product, especially in hard water areas.
- We recommend cleaning the fixture(s) with warm water and a clean cloth. Immediately dry thoroughly to prevent watermarks.
- To remove stubborn marks, apply a 50/50 vinegar and water solution to the fixture(s). Do not allow the solution to sit on the fixture(s). Immediately rinse and dry thoroughly.
- Do not use any off the shelf cleaning products. Use of such products could invalidate the guarantee.
- We recommend drying the external fixture(s) after each use.

FAQ's

The flange/plate will not slide over the valve body?

The black rubber seal on the inside of the flange/plates is designed to stop water passing by - therefore it is a very tight fit. If you come across this problem, simply press the rubber seal into the plate using your fingers and then slide it over.

The temperature is not mixing?

Ensure that you have installed the hot and cold feed correctly. Check your hot and cold feed pressures are balanced. Lastly, check the thermostat for debris by removing it and soaking it in vinegar for 1-2 hours.

How do I access the filters?

If your water system is flushed beforehand, in theory the filters should never clog up. If you live in an extremely hard water or contaminated area, you can remove the filter mesh and just re-insert the screwed in isolation valve.

How do I remove the cartridge to clean or replace?

To remove the cartridges, Isolate the flow of water. Remove the sleeves and then unscrew the retaining nut or grub screw to access the cartridge. For cleaning, soak in a vinegar solution for 1-2 hours and re-install. When replacing the cartridge, ensure to line up the location pins on the diverters and on/off cartridge. Check for leaks before reinstalling the handles.

** To apply to become an approved AVA Installer & Pro Partner,*
Register the clients Guarantee & provide your business details.
*Follow the QR code below to get started**

Register Your Guarantee:

15 Years: Product | **3 Years:** Finish, Cartridges and consumables

To register your guarantee or for further support please scan the QR code

Grade 304 Stainless Steel | Tricolore Mix & Match Options | Vernet European Cartridges | 15 Year Product Guarantee | Neoperl Aerator Technology | Sustainable Manufacturing | 4 Quality Finishes | Kerox European Cartridges | Design & Assembled in the UK | Superior PVD Production